PIPE SIZE (NOMINAL) IN.	MM.	DIMENSIONS AF±0.13 IN.	MM.	BF IN.	MM.	AT±0.13 IN.	MM.	BT IN.	MM.	C IN.	MM.	D IN.	MM.	E IN.	MM.	F IN.	MM.	G IN.	MM.	H IN.	MM.	J IN.	MM.	K IN.	MM.	L IN.	MM.	M IN.	MM.	N IN.	MM.	STRAINER WEIGHT LBS.	KGS.	STRAINER PART NO.
3/4	(20)					6.13	156	2.84	72	5.00	127	10.50	267	13.38	340	10.50	268	16.50	419	7.88	200	3.25	83	2.13	54	1.63	41	2.75	70	3/8	(10)	41	19	ST053007BT33TS
1	(25)					5.50	140	2.53	64	5.00	127	10.50	267	13.38	340	10.50	268	16.50	419	7.88	200	3.25	83	2.13	54	1.63	41	2.75	70	3/8	(10)	39	18	ST053010BT33TS
1	(25)	6.88	175	3.19	81					5.00	127	10.50	267	13.38	340	10.50	268	16.50	419	7.88	200	3.25	83	2.13	54	1.63	41	2.75	70	3/8	(10)	45	20	ST053010BR33TS
1-1/4	(32)					8.75	222	3.75	95	6.81	173	12.75	324	17.00	432	13.25	330	19.88	505	7.88	200	3.25	83	2.13	54	1.63	41	2.75	70	3/8	(10)	89	40	ST053012BT33TS
1-1/2	(40)					7.50	190	3.25	83	6.81	173	12.75	324	17.00	432	13.25	330	19.88	505	7.88	200	3.25	83	2.13	54	1.63	41	2.75	70	3/8	(10)	86	39	ST053015BT33TS
1-1/2	(40)	9.38	238	4.31	109					6.81	173	12.75	324	17.00	432	13.25	330	19.88	505	7.88	200	3.25	83	2.13	54	1.63	41	2.75	70	3/8	(10)	97	44	ST053015BR33TS
2	(50)					10.00	254	4.50	114	8.38	213	15.50	394	21.75	552	17.38	441	26.25	667	10.63	270	4.69	119	2.50	64	1.81	46	4.00	102	5/8	(16)	168	77	ST053020BT33TS
2	(50)	10.63	270	4.63	117					8.38	213	15.50	394	21.75	552	17.38	441	26.25	667	10.63	270	4.69	119	2.50	64	1.81	46	4.00	102	5/8	(16)	179	81	ST053020BR33TS
2-1/2	(65)					10.00	254	4.50	114	8.38	213	15.50	394	21.75	552	17.38	441	26.25	667	10.63	270	4.69	119	2.50	64	1.81	46	4.00	102	5/8	(16)	168	77	ST053025BT33TS
2-1/2	(65)	10.75	273	4.69	119					8.38	213	15.50	394	21.75	552	17.38	441	26.25	667	10.63	270	4.69	119	2.50	64	1.81	46	4.00	102	5/8	(16)	197	89	ST053025BR33TS
3	(80)	13.50	343	5.93	151					8.88	226	18.00	457	26.50	673	22.75	578	35.00	889	12.00	305	4.69	119	2.50	64	1.81	46	4.00	102	5/8	(16)	306	139	ST053030BR33TS
4	(100)	16.00	406	7.06	179					13.25	337	21.63	549	33.00	838	24.75	629	36.75	933	12.00	305	5.19	132	3.94	100	3.25	83	4.50	114	5/8	(16)	420	191	ST053040BR33TS

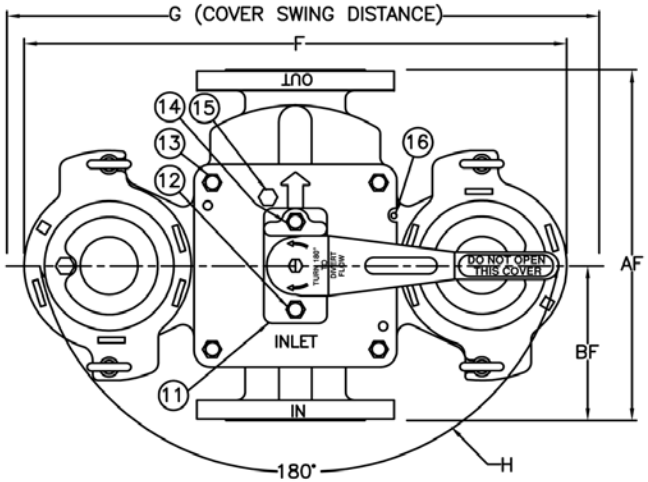

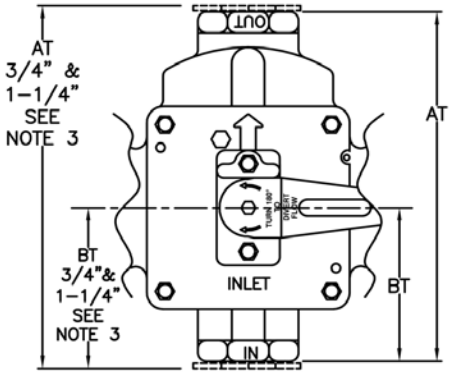

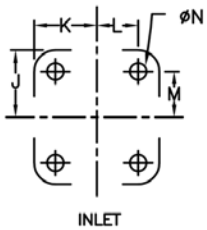

FOOT PAD LAYOUT

ITEM	PART NAME	MATERIAL	QTY.
1	BODY	CARBON STEEL, A216 WCB	1
2▲	BASKET	STAINLESS STEEL, 316	2▲
	PERF. DIA.		
	MESH SIZE		
3	COVER	CARBON STEEL, A216 WCB	2
4	CARTRIDGE	CARBON STEEL, A216 WCB	1
5	STUD	CARBON STEEL	4
6	EYENUT	CARBON STEEL	4
7 8 9	PIPE PLUG	CARBON STEEL	2, 3, 2
10▲	WASHER	STAINLESS STEEL	1▲
11	STEM RETAINER	STAINLESS STEEL	1
12 13 14	CAP SCREW	CARBON STEEL	1, 4, 1
15	VENT VALVE	BRASS	1
16	PIN	CARBON STEEL	1
17	HANDLE	DUCTILE IRON/CARBON STEEL	1
18	CAP SCREW	CARBON STEEL	1
19▲ 20▲ 21▲	O-RING	BUNA-N	2▲, 4▲, 2▲
22▲	SEAL	BUNA-N	4▲
23▲	SEAT	TEFLON	4▲
24	BALL	STAINLESS STEEL	2
25 26	STEM	STAINLESS STEEL	1, 1

(▲ - SPARES)

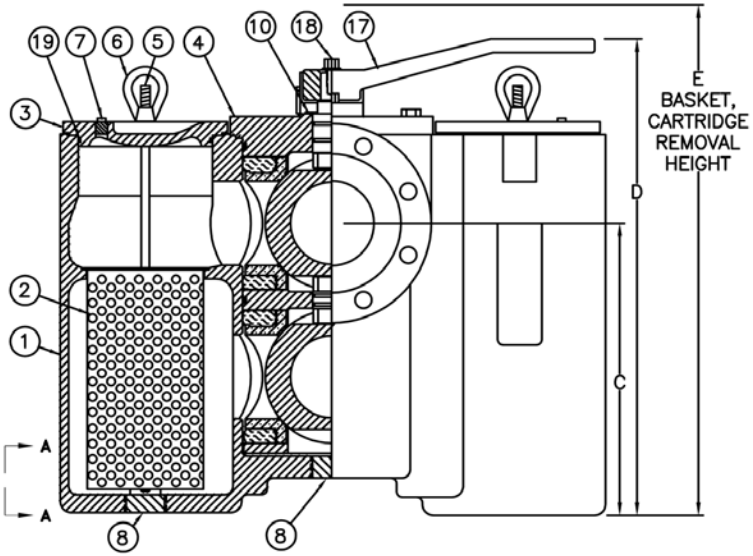

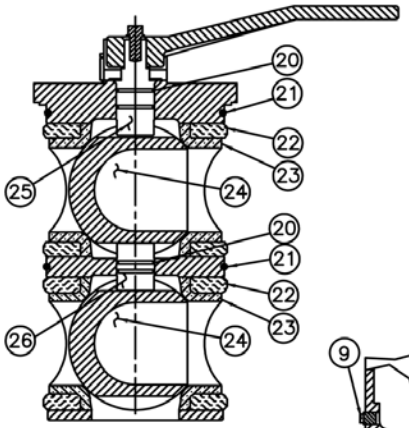

CARTRIDGE

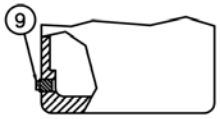

VIEW A-A

NOTES:
1. INLET/OUTLET CONNECTIONS PER ANSI STANDARDS.
2. MAX. WORKING PRESSURE: 200 PSI @ 150° F (13.8 BAR @ 65.5°C)
3. BUSHINGS USED FOR 3/4" & 1-1/4" CONNECTIONS.

CERTIFIED FOR: --

P.O. NO.: -- QUOTE NO.: --

REG. NO.: -- TAG NO.: --

Monarch Asia Pacific - Brisbane, Australia
web: www.monarchasiapacific.com.au
PSF Equipment - Bangkok, Thailand
web: www.psfthailand.com

EATON

NAME MODEL 53 "BTX" - DUPLEX STRAINER
ANSI CLASS 150 RF FLANGE & NPT
SIZES 3/4" THROUGH 4" CARBON STEEL

DRAWN VA | DATE 08/16/99 | CERT. WB | DATE 08/16/99

SIZE A | DWG NO SD053083 | REV J

ELECTRONIC FILE NAME: SD053083.DWG

REF. ECR D507 | DATE 11/1/05

UNAUTHORIZED USE, MANUFACTURE OR REPRODUCTION IN WHOLE OR IN PART IS PROHIBITED.